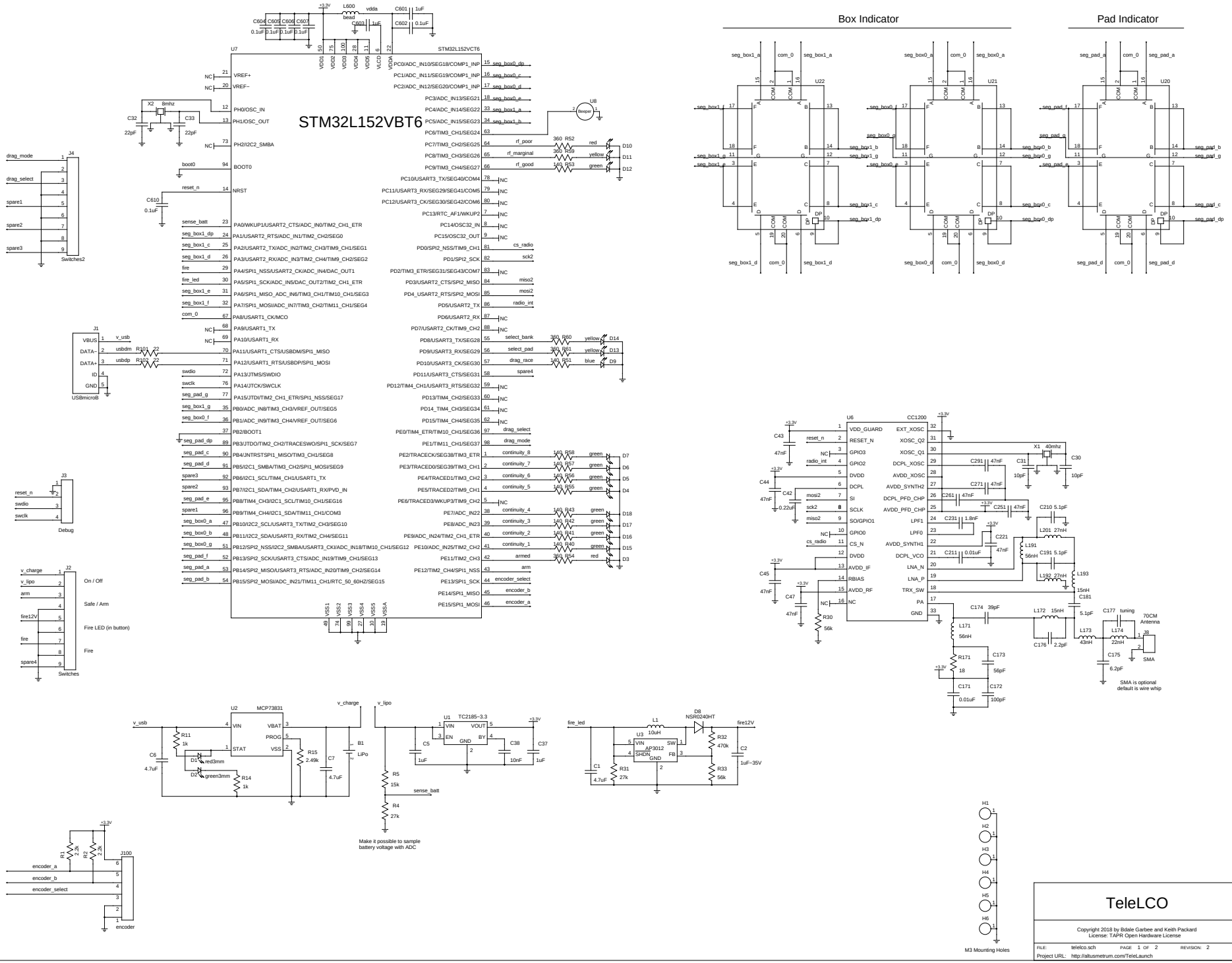
STM32L152VBT6
U7
STM32L152VCT6
Box Indicator
Pad Indicator
U22
U21
U20
U6
CC1200
U1
TC2185-3.3
U2
MCP73831
U3
AP3012
U8
Beeper
J1
USB8microB
J2
Switches
J3
Debug
J4
Switches2
J100
encoder
J8
SMA
SMA is optional
default is wire whip
70CM
Antenna
M3 Mounting Holes
Make it possible to sample
battery voltage with ADC
TeleLCO
Copyright 2018 by Bdale Garbee and Keith Packard
License: TAPR Open Hardware License
FILE: telelco.sch
PAGE 1 OF 2
REVISION: 2
Project URL: http://altusmetrum.com/TeleLaunch