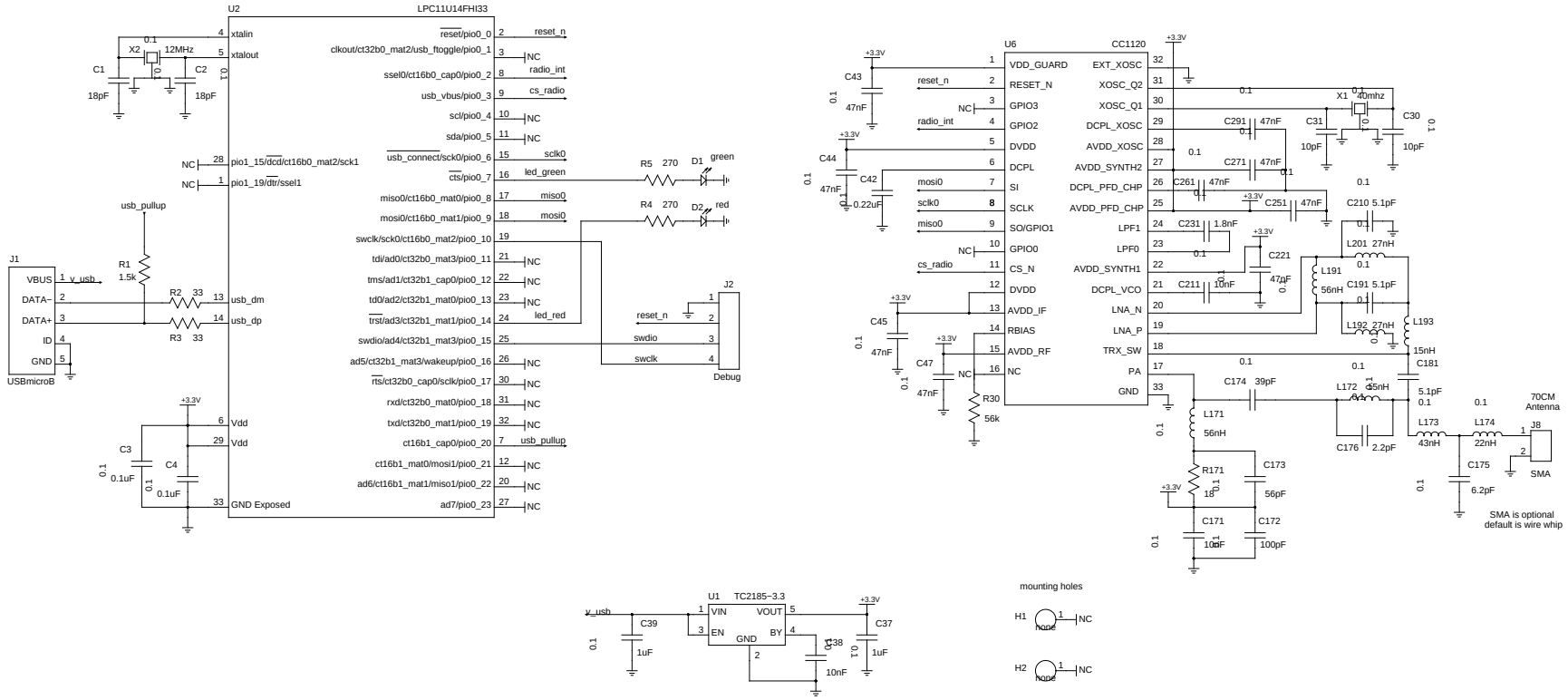

TeleDongle

Copyright 2016 by Bdale Garbee <bdale@gag.com> and Keith Packard <keithp@keithp.com>
Licensed under the TAPR Open Hardware License, http://www.tapr.org/OHL

FILE: teledongle.sch PAGE 1 OF 1 REVISION: 3.0

Project URL: http://altusmetrum.com/TeleDongle